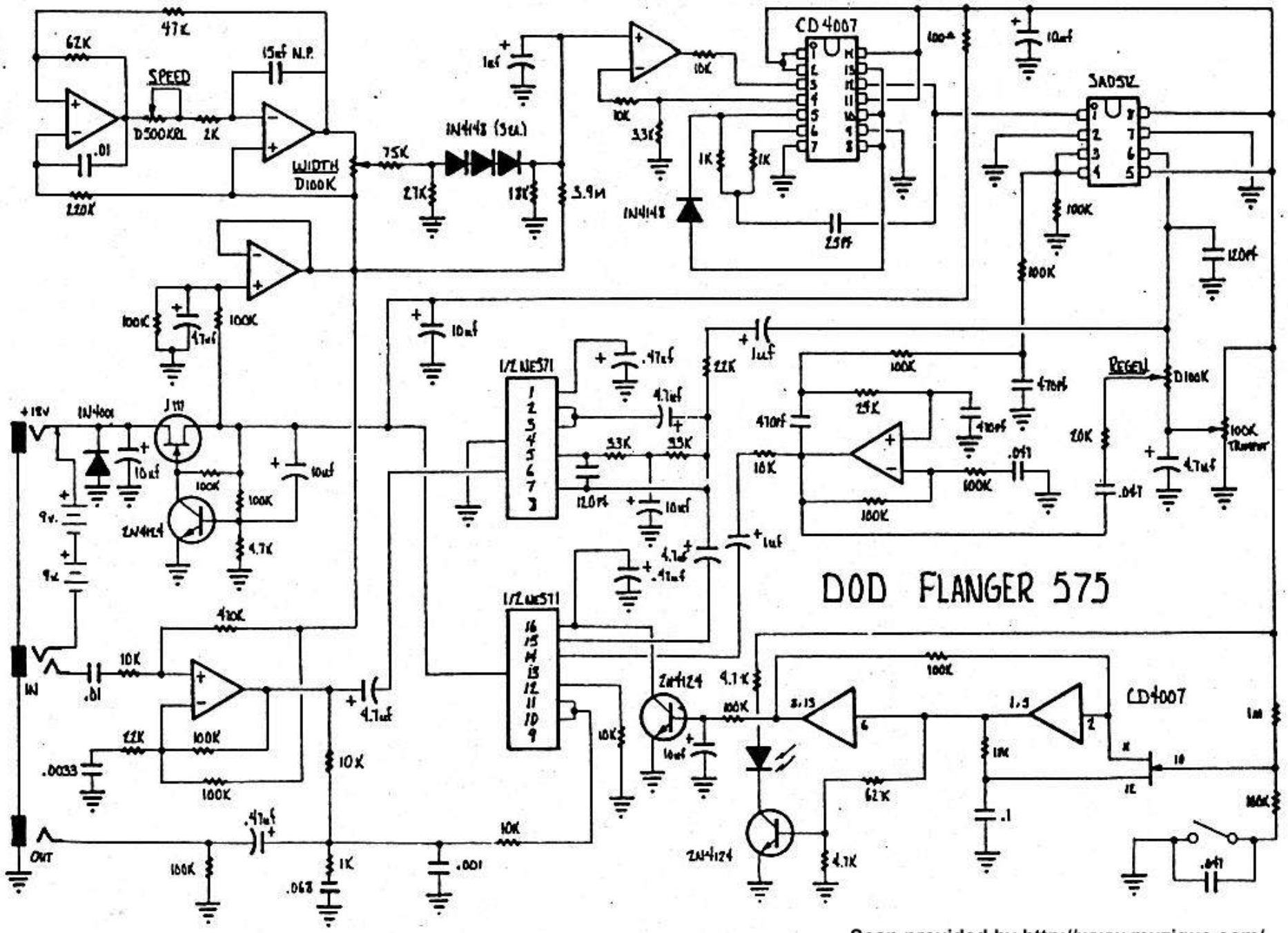

Scan provided by http://www.muzique.com/