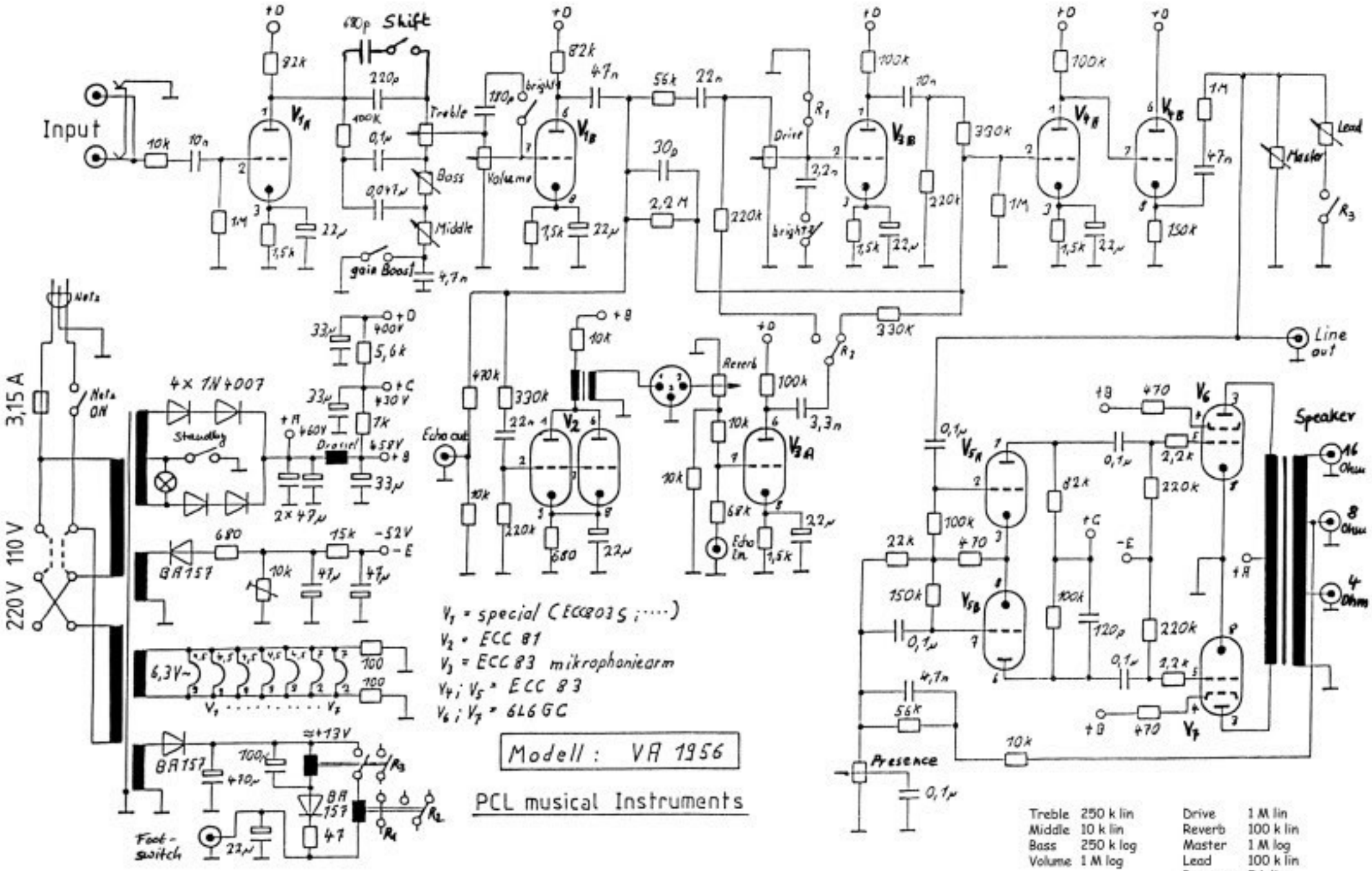
Input
Shift
Treble
Bass
Middle
Volume
gain Boost
bright
Drive
Reverb
Master
Lead
Presence
Line out
Speaker
16 Ohm
8 Ohm
4 Ohm
Echo out
Echo in
Foot-switch
Netz
Netz ON
3,15 A
220 V 110 V
4 x 1N4007
Standby
Drossel
BA157
6,3V~
≈+13V
V1 = special (ECC803S ; ....)
V2 = ECC 81
V3 = ECC 83 mikrophonieam
V4 ; V5 = ECC 83
V6 ; V7 = 6L6GC
Modell : VR 1956
PCL musical Instruments
Treble 250 k lin
Middle 10 k lin
Bass 250 k log
Volume 1 M log
Drive 1 M lin
Reverb 100 k lin
Master 1 M log
Lead 100 k lin
Presence 5 k lin