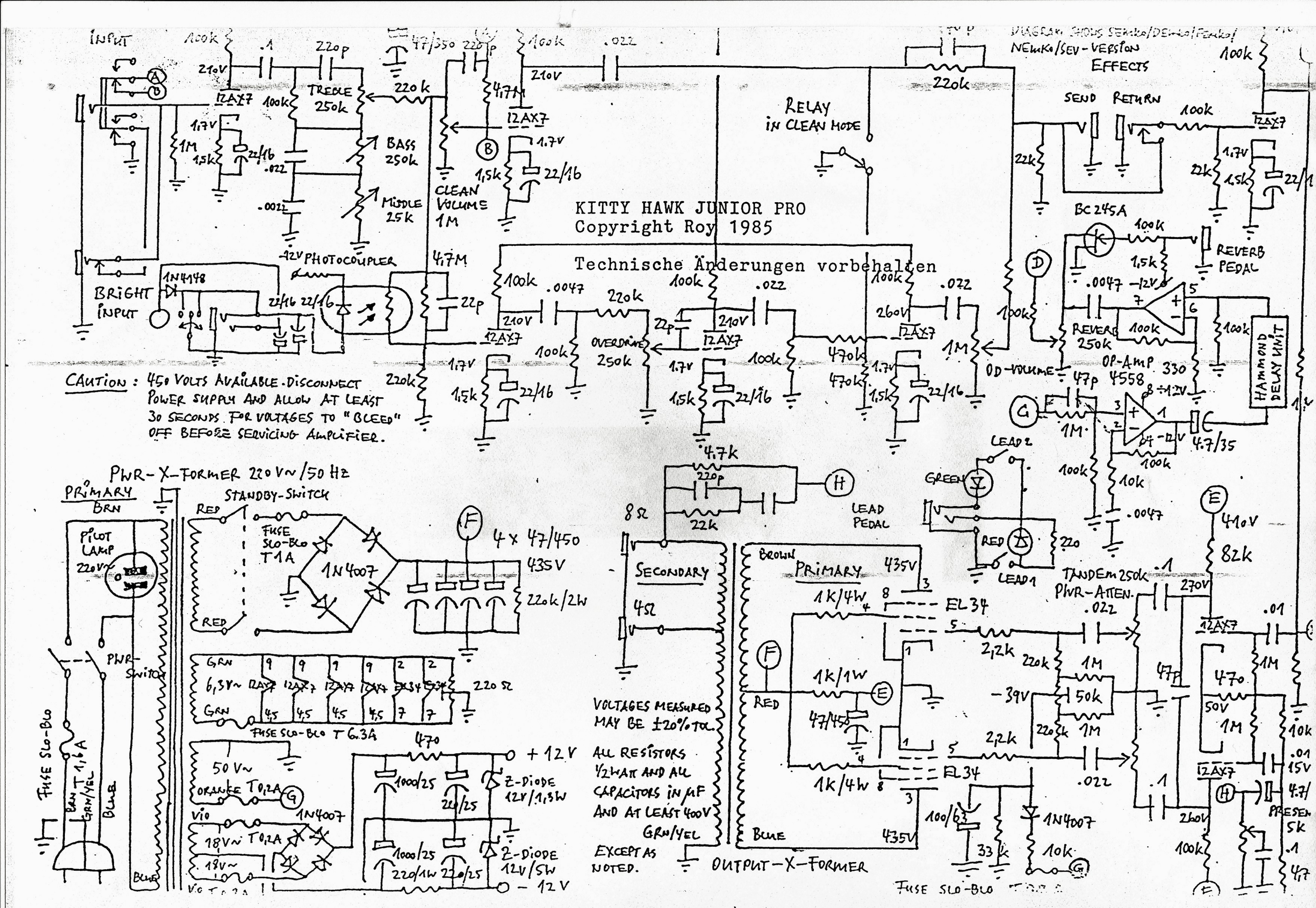
KITTY HAWK JUNIOR PRO
Copyright Roy 1985
Technische Änderungen vorbehalten
DIAGRAM SHOWS SEMKO/DEMKO/FEMKO/NEMKO/SEV-VERSION
INPUT
BRIGHT INPUT
TREBLE 250k
BASS 250k
MIDDLE 25k
CLEAN VOLUME 1M
PHOTOCOUPLER
RELAY IN CLEAN MODE
EFFECTS
SEND
RETURN
BC 245A
REVERB PEDAL
REVERB 250k
OP-AMP 330
4558
HAMMOND DELAY UNIT
OD-VOLUME
OVERDRIVE 250k
LEAD 2
LEAD 1
GREEN
RED
LEAD PEDAL
CAUTION: 450 VOLTS AVAILABLE. DISCONNECT POWER SUPPLY AND ALLOW AT LEAST 30 SECONDS FOR VOLTAGES TO "BLEED" OFF BEFORE SERVICING AMPLIFIER.
PWR-X-FORMER 220 V~/50 Hz
PRIMARY
BRN
PILOT LAMP 220V~
PWR-SWITCH
FUSE SLO-BLO T 1,6 A
STANDBY-SWITCH
FUSE SLO-BLO T1A
1N4007
4 x 47/450
435V
220k/2W
6,3V~
FUSE SLO-BLO T 6,3A
220 Ω
50 V~
ORANGE T0,2A
18V~ T0,2A
+ 12 V
- 12 V
Z-DIODE 12V/1,3W
Z-DIODE 12V/5W
SECONDARY
4Ω
8Ω
VOLTAGES MEASURED MAY BE ±20% TOL.
ALL RESISTORS 1/2 WATT AND ALL CAPACITORS IN µF AND AT LEAST 400V
GRN/YEL
EXCEPT AS NOTED.
OUTPUT-X-FORMER
BROWN
PRIMARY
435V
EL34
1k/4W
1k/1W
47/450
2,2k
220k
1M
50k
-39V
TANDEM 250k PWR-ATTEN.
12AX7
470
50V
PRESENCE 5k
410V
82k
270V
260V
100/63
33k
10k
1N4007
FUSE SLO-BLO