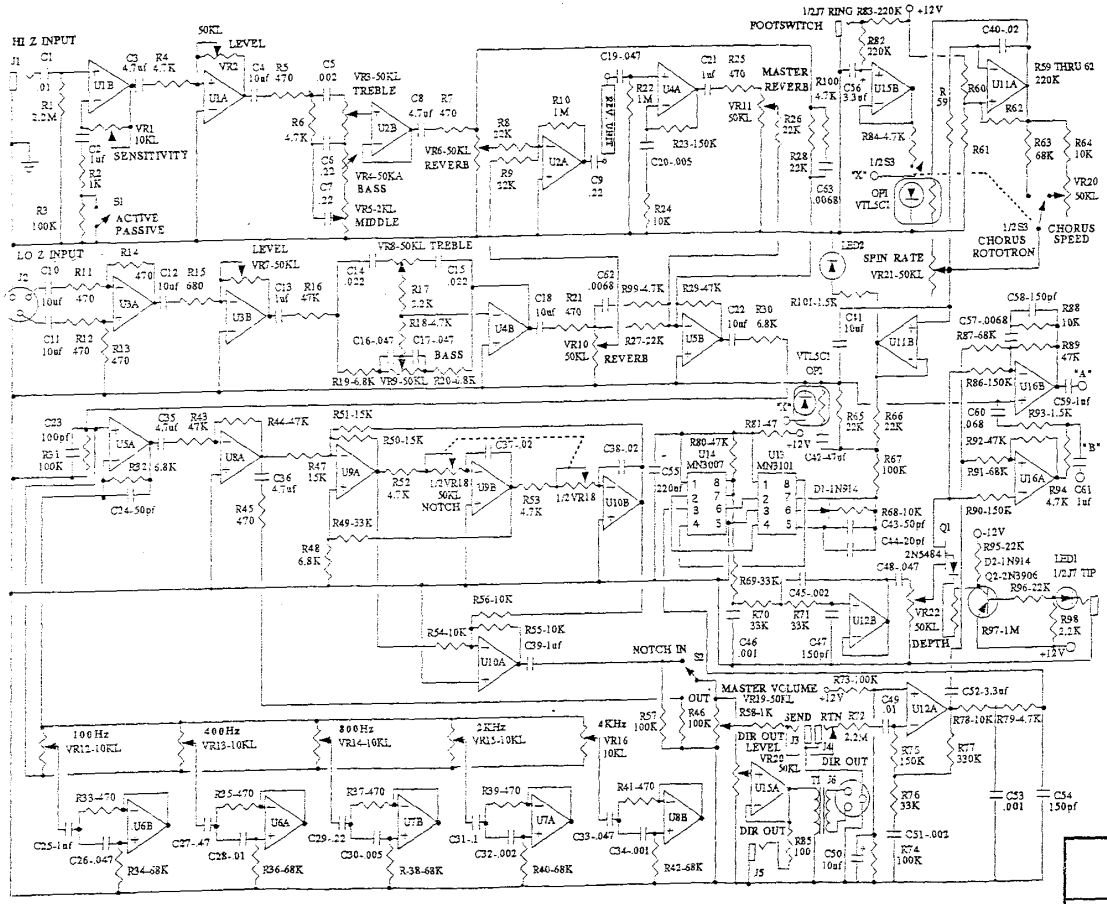

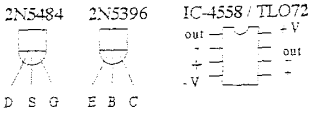

U.S. MUSIC / Guild

SCALE:	APPROVED BY:	DRAWN BY
DATE: 10-93		REVISED

G-700 "SEQUOIA" PREAMP

DSGN:

DRAWING NUMBER PCB 02H77