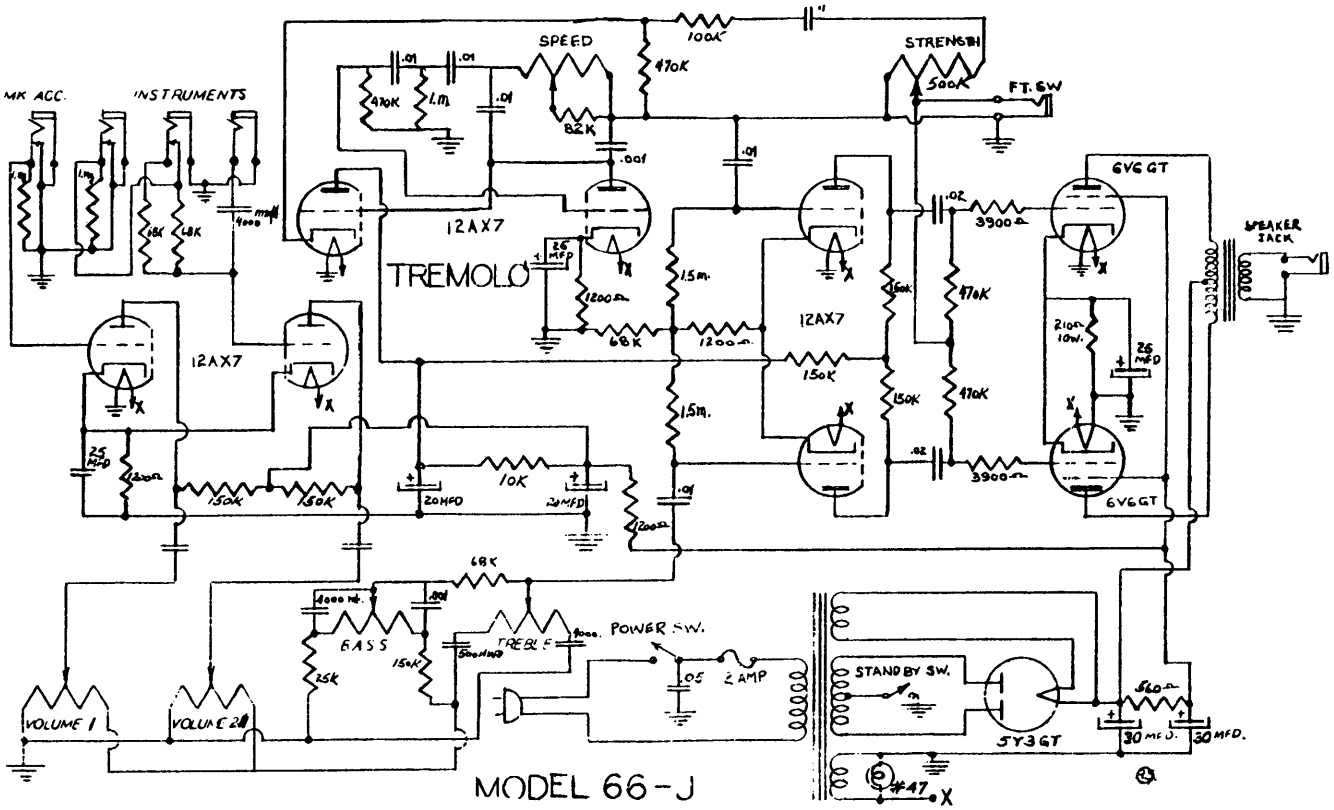
MK ACC.
INSTRUMENTS
SPEED
STRENGTH
FT. SW
12AX7
TREMOLO
6V6 GT
SPEAKER JACK
VOLUME 1
VOLUME 2
BASS
TREBLE
POWER SW.
STAND BY SW.
5Y3GT
MODEL 66-J

GUILD