THIS PRODUCT MANUFACTURED UNDER ONE OR MORE OF THE FOLLOWING U.S. PATENTS #2817708, #2973681, #192859 AND PATENTS PENDING.

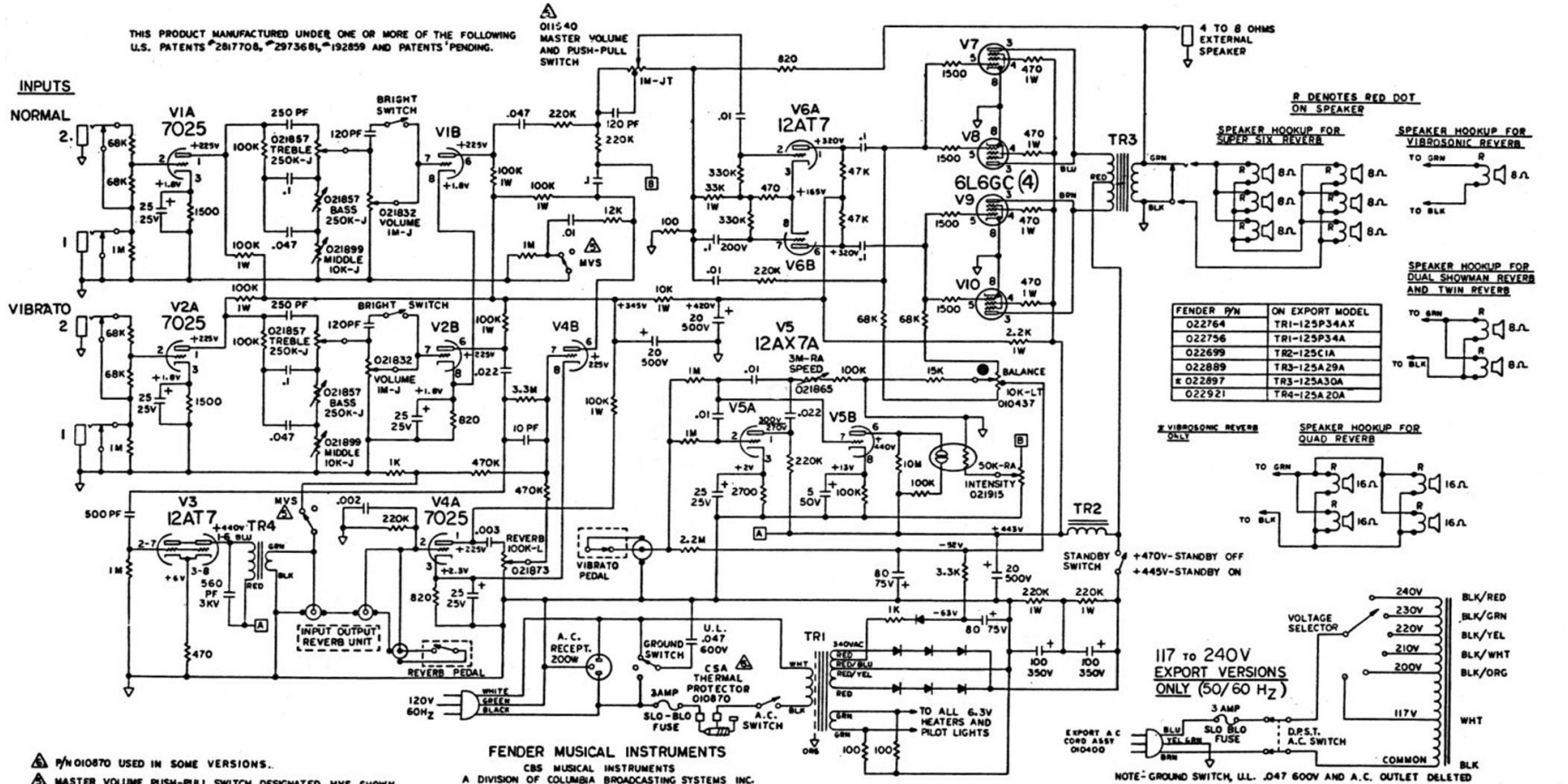

FENDER P/N	ON EXPORT MODEL
022764	TR1-125P34AX
022756	TR1-125P34A
022699	TR2-125C1A
022889	TR3-125A29A
* 022897	TR3-125A30A
022921	TR4-125A20A

* VIBROSONIC REVERB ONLY

FENDER MUSICAL INSTRUMENTS
CBS MUSICAL INSTRUMENTS
A DIVISION OF COLUMBIA BROADCASTING SYSTEMS INC.
FULLERTON, CALIFORNIA
U.S.A.

MODEL NO.	USED ON
	VIBROSONIC REV. EXP.
	VIBROSONIC REVERB
	SUPER SIX REVERB EXP.
	QUAD REVERB EXPORT
	DUAL SHOWMAN REV. EXP.
	TWIN REVERB EXPORT
CFA7106	SUPER SIX REVERB
CFA7104	QUAD REVERB
TFLS0009	DUAL SHOWMAN REVERB
	TWIN REVERB

UNLESS OTHERWISE SPECIFIED TOLERANCES
FRACTIONS ±1/32
.X ±.015
.XX ±.010
.XXX ±.005
ANGLES ±.5°
FRACTIONAL WOOD ±1/16
HOLES - CORED +.005 -.000
HOLES - DRILLED & PUNCHED +.005 -.000
STRAIGHTNESS
UNMARKED ANGLES ARE 90°
ALL DIMENSIONS ARE IN INCHES
DO NOT SCALE DRAWING

DWN ROSALES 11/17/70
CHK
APPD MLR
APPD EE
MATERIAL
FINISH & COLOR

CBS, MUSICAL INSTRUMENTS FULLERTON, CALIFORNIA
DWG. TITLE — SCHEMATIC —
100 WATTS RMS AMP
W/ REVERB AND VIBRATO
REL. NO. 618
SIZE D
DWG. NO. 010182
REV F
SCALE
MODEL SEVERAL
SHEET 1 OF 1

1. VOLTAGES READ TO GROUND WITH V.T.V.M. WITH VIBRATO GROUNDED (EXCEPT V5) - NO INPUT SIGNAL.
2. ALL RESISTORS 1/2 WATT ± 10%.
3. ALL CAPACITORS AT LEAST 600V, W.V.D.C.
4. FENDER P/N FOR CONTROLS INDICATED.
5. MASTER VOLUME PUSH-PULL SWITCH DESIGNATED MVS SHOWN IN "OUT" POSITION. PUSH IN FOR PURE SOUND. USED IN SOME VERSIONS.
6. P/N 010870 USED IN SOME VERSIONS.

NOTES: UNLESS OTHERWISE SPECIFIED